International Journal of Scientific & Engineering Research, Volume 5, Issue 6, June-2014
ISSN 2229-5518

Torque Ripple Reduction in Three-level SVM Based Direct Torque Control of Induction Motor

Kousalya D
Department of EEE
RMK Engineering College
Chennai
kousalya.du@gmail.com

Asiya Husna V
Department of EEE
RMK Engineering College
Chennai
husna.asiya90@gmail.com

Manoj Kumar N
Department of EEE
RMK Engineering College
Chennai
nmanojkumar_17@yahoo.in

***Abstract*—In this paper new direct torque control scheme is proposed which aids in alleviating the torque ripple using space vector modulation based multilevel diode clamped inverter. Direct Torque Control (DTC) is one of the excellent control strategies of torque and flux control in induction machine. The hysteresis comparators are used to compensate the error between estimated and reference torque and flux. But major problems aroused in DTC drives are steady state torque and flux pulsations due to hysteresis comparators. Three-level neutral point clamped inverters have been widely used in medium voltage applications. Due to more number of levels in the output voltage waveforms in three level diode clamped inverter, we can obtain less total harmonic distortion in voltage and current waveforms. The control scheme is implemented using MATLAB/Simulink. From experimental results it is concluded that the proposed method produces less torque and flux ripple in steady-state operation than the classical DTC.**

***Keywords*—Direct Torque Control, Space Vector Modulation, Induction Motor.**

I. INTRODUCTION

In nineties, direct torque control of induction machines has been developed. It gives fast and good dynamic torque response. DTC can be considered as substitute to the field-oriented control (FOC) technique [1], [2]. The DTC scheme as initially proposed is very simple which consists of a pair of hysteresis comparators, torque and flux calculator, a lookup table, and a voltage-source inverter (VSI). The main advantages are it does not require any transformation or PWM pulse generation and current regulators. It minimizes the use of machine parameters [3], which results in less sensitive to parameter variations. The main drawbacks of DTC are variations of the switching frequency of inverter and torque ripple [4]. The root cause to the variable switching frequency problem is the use of hysteresis comparators. An analysis of the switching frequency for hysteresis-based controllers in DTC drives is presented in [5]. It is shown that the switching frequency is highly influenced by the motor speed, which is mainly due to the torque slope that depends on motor speed. The problem of variable switching frequency can be solved by two methods: first method is using variable hysteresis bands to maintain a constant switching frequency [6], but it's implementation will increase the complexity and second method is performing the switching at regular intervals [7] [8], in case an active or zero voltage vector is applied to the whole switching period, then the torque ripple will inevitably become higher. Several techniques have been developed to diminish torque ripple. The pulse duration of the output voltage vector is determined by the torque ripple minimum condition [9],[18]. This method can significantly decrease the torque ripple, but they increase the complexity of the DTC algorithm.Conversely, in high power application area multi-level inverters have become a very attractive solution [10-13]. The three-level Neutral Point Clamped (NPC) inverter is one of the most commonly used multi-level inverter topologies in high power ac drives. When comparing with the standard two-level Inverter, the three-level inverter is more superior in terms of lower stress across the semiconductors, lower voltage distortion, less harmonic content and lower switching frequency.

This paper proposes simple and effective control strategy to maintain constant switching frequency and to minimize the torque ripple in DTC. To maintain a constant switching frequency, a simple PI torque and flux controller is introduced to replace the hysteresis comparator. The proper voltage vector is selected using new space vector modulation technique applied to three level diode clamped inverter. Thus, the torque ripple is smaller compared to the hysteresis band controller. The simulation results shows that torque and flux ripple are decreased with constant switching frequency in proposed technique. The section II describes the mathematical modelling of induction motor. Direct Torque Control with three level diode

clamped inverter schemes are described in section III. Simulation results and conclusions are presented in section IV and section V respectively.

II. INDUCTION MOTOR MODELLING

The voltage balance equations for the d-q coils are represented in terms of space voltage vector in a stationary reference frame as given in equation (1) to (4).

$$V_{ds} = R_S\, I_{ds} + P\psi_{ds} + \psi_{ds}\, P\theta \qquad (1)$$

$$V_{qs} = R_S\, I_{qs} + P\psi_{qs} - \psi_{qs}\, P\theta \qquad (2)$$

$$V_{dr} = R_r\, I_{dr} + P\psi_{dr} + \psi_{qr}\, P\beta \qquad (3)$$

$$V_{qr} = R_r\, I_{qr} + P\psi_{qr} - \psi_{dr}\, P\beta \qquad (4)$$

The flux linkage equation is given as

$$\begin{bmatrix}\psi_{ds}\\ \psi_{dr}\\ \psi_{qs}\\ \psi_{qr}\end{bmatrix} = \begin{bmatrix} L_s & L_M & 0 & 0\\ L_M & L_R & 0 & 0\\ 0 & 0 & L_s & L_M\\ 0 & 0 & L_M & L_R\end{bmatrix}\begin{bmatrix} i_{ds}\\ i_{dr}\\ i_{qs}\\ i_{qr}\end{bmatrix} \qquad (5)$$

The stator flux vector of an induction motor can be related to stator voltage and current vectors by

$$\psi_s = \int (V_s - R_S I_S)dt \qquad (6)$$

From the above Equation we deduce that the stator flux vector is directly affected by variations on the stator voltage vector. The electromagnetic torque equation is given from (7) to (8).

$$T_e = T_L + B\omega_m + J\frac{d\omega_m}{dt} \qquad (7)$$

$$T_e = \frac{3}{2}\frac{p}{2}\left(\frac{L_M}{L_S L_r}\right)(\psi_s * \psi_r) \qquad (8)$$

Where,

$$P = \frac{d}{dt}$$

p - Number of poles

$$\Psi_s = L_s I_s + L_m I_r \qquad (9)$$

$$\Psi_r = L_r I_r + L_m I_s \qquad (10)$$

$$L_s = L_r L_s + L_m^{\,2} \qquad (11)$$

V_{ds}, V_{qs} are the stator voltage in d and q axis respectively. I_{ds} , I_{qs} are stator current in d and q axis respectively. R_s, Rr are stator and rotor resistance respectively. L_s, L_r, L_M are the stator inductance, rotor inductance and mutual inductance.

III. DIRECT TORQUE CONTROL WITH THREE LEVEL DIODE CLAMPED INVERTER

The principle behind direct torque control of induction motor drive is to control the flux linkage and electromagnetic torque directly by the selecting proper inverter switching state with the help of lookup table. The conventional DTC includes two level and three level hysteresis controllers, three levels for torque and two levels for flux linkage. Even though it has many advantages like no feedback control, no traditional PWM algorithm, no vector transformation, it has some drawbacks like variable switching frequency, inherent steady state torque and flux ripple. Due to hysteresis band controller, steady state torque and flux ripple is more in direct torque control of induction motor which is undesirable from smooth response point of view.

Direct Flux and Torque Control with Space Vector Modulation (DTC-SVM) schemes are proposed in order to improve the classical DTC of Induction motor. The DTC-SVM strategy as shown in Fig. 1 operates at a constant switching frequency. The inverter is controlled by the space vector modulation technique instead of voltage sector selection block as used in classical DTC. The DTC-SVM strategy depends on the applied flux and torque estimation block. The controllers calculate the required stator voltage vector and then it is realized by space vector modulation technique. In this scheme there are two proportional integral (PI) type controllers instead of hysteresis band to regulate the torque and the magnitude of flux. By controlling torque and flux amplitude, a gate signal for inverter is generated.

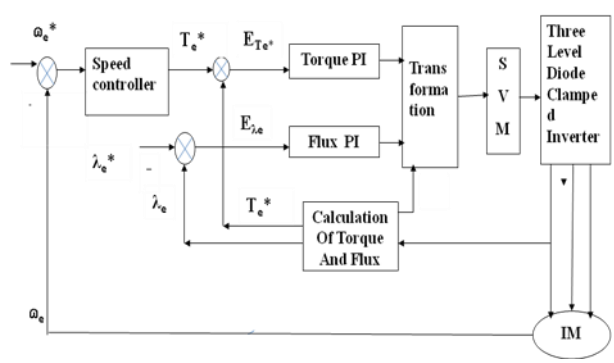

Fig.1 Block Diagram of Three-Level DTC-SVM Scheme of Induction Motor.

A. *Three Level Diode Clamped Inverter*

Three level diode clamped inverter employed in DTC algorithm is shown in Fig. 2. With such inverter,

the possible inverter switching states, for each phase is shown in table I.

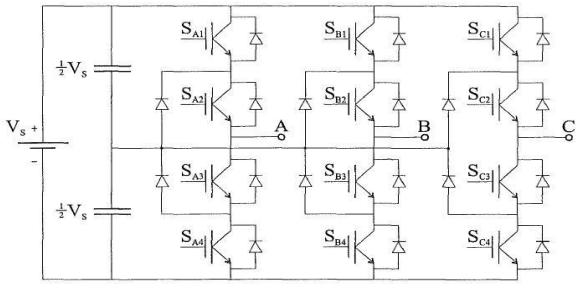

Figure 2 Three Level Diode Clamped Inverter.

As shown in Fig.2, each leg in three-level inverter is constituted by four controllable switches with two clamping diodes. Two equal capacitors splits the DC bus voltage into three voltage levels $+V_s/2$, 0, $-V_s/2$ thus the name 3-level. Clamping diodes blocks the reverse voltage of the capacitor and provide connection to the neutral point. SP1, SP2, SP3, SP4 are Switches in three level diode clamped inverter where P refers to phase A, B and C respectively.

TABLE I : Switching States of Inverter

STATE/ SWITCH	SP1	SP2	SP3	SP4	Vo
1	ON	ON	OFF	OFF	$V_S/2$
0	OFF	ON	ON	OFF	0
-1	OFF	OFF	ON	ON	$-V_S/2$

A three-level inverter is characterized by 3^3= 27 switching states as indicated in Fig.3 where the space vector diagram for the three-level inverter which is divided into the six sectors (A, B, C, D, E and F) as shown. There are 24 active states, and three zero states that lie at the center of the hexagon. Each sector has four regions (1, 2, 3, 4) [14].The switching states of the inverter are summarized in Table I, where P represents the output phases, a, b and c [15-16].

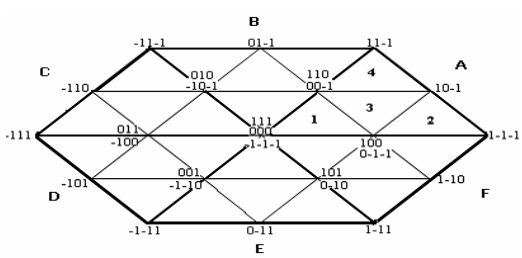

Fig.3 Space Vector Representation.

The principle of SVPWM method is that the command voltage vector is approximately calculated by using three adjacent vectors.

1. Calculation of sector Number and Region

A three-level inverter similar to a two-level inverter, each space vector diagram is divided into six sectors. The switching pattern for Sector A are defined and calculation technique for the other sectors are similar. Sector A is divided into four regions as shown in Fig.4 where all the possible switching states for each region are defined. Steps involved in the SVPWM for three-level inverters are sector determination, selection of the region in the sector, switching times calculation, and determination of the switching states.

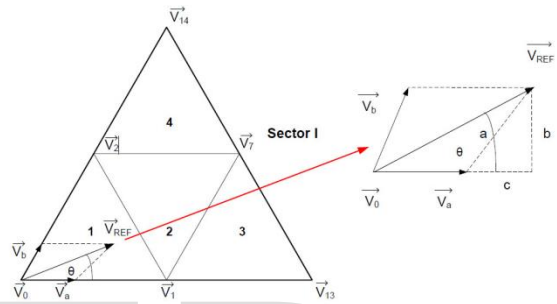

Fig.4 Sector A and its switching states for three-level inverter

After α is calculated, the sector in which the command vector $\vec{V}_{ref}$ is located, is determined as;

If α is between

- $0° \leq \alpha < 60°$, Sector A,
- $60° \leq \alpha < 120°$, Sector B,
- $120° \leq \alpha < 180°$, Sector C,
- $180° \leq \alpha < 240°$, Sector D,
- $240° \leq \alpha < 300°$, Sector E,
- $300° \leq \alpha < 360°$, Sector F.

From the Fig.4 it can be observed that two additional vectors $\vec{V_a}$ and $\vec{V_b}$ are used to determine the region

$$\vec{V}_a = \vec{V}_{ref} \left(\cos\theta - \frac{\sin\theta}{\sqrt{3}}\right) \qquad (15)$$

$$\vec{V}_b = 2 * \vec{V}_{ref} \frac{\sin\theta}{\sqrt{3}} \qquad (16)$$

Using equations (15) and (16) it is possible to specify the working region [17]:

- If V_a, V_b and $(V_a + V_b)$ are smaller than $0.33V_{DC}$, then $\vec{V}_{ref}$ is placed in region 1.
- If V_a, V_b are smaller than $0.33V_{DC}$ and $(V_a + V_b)$ is higher than $0.33V_{DC}$, and then $\vec{V}_{ref}$ is placed in region 2.

- If V_a is higher than $0.33V_{DC}$, then $\overline{V}_{ref}$ is placed in region 3.
- If V_b is higher than $0.33V_{DC}$, then $\overline{V}_{ref}$ is placed in region 4.

2. Calculation of time duration

The principle of SVPWM method is based on the command voltage vector which is approximately calculated by using three adjacent voltage vectors. The duration of each voltage vectors obtained by using voltage time equation of vector calculation:

$$T_a V_1 + T_b V_2 + T_c V_0 = T_s V_{ref} \quad (18)$$

$$T_a + T_b + T_c = T_s \quad (19)$$

V_1, V_2 and V_0 are the vectors that are defined in the triangle region in which V_{ref} is located. T_1, T_2 and T_3 are the corresponding vector durations and T_s is the sampling time. T_a,T_b,T_c are switching times for sector A is given in Table.II

TABLE II: Switching Time Calculation

	REGION I	REGION II
T_a	$T_s[2M_a \sin(\frac{\pi}{3}-\theta)]$	$T_s[1-2M_a \sin(\theta)]$
T_b	$T_s[1-2M_a \sin(\frac{\pi}{3}-\theta)]$	$T_s[2M_a \sin(\frac{\pi}{3}+\theta)-1]$
T_c	$T_s[2M_a \sin(\theta)]$	$T_s[1-2M_a \sin(\frac{\pi}{3}-\theta)]$
	REGION II	**REGION IV**
T_a	$T_s[2-2M_a \sin(\frac{\pi}{3}+\theta)]$	$T_s[2M_a \sin(\theta)-1]$
T_b	$T_s[2M_a \sin(\theta)]$	$T_s[2M_a \sin(\frac{\pi}{3}-\theta)]$
T_c	$T_s[2M_a \sin(\frac{\pi}{3}-\theta)-1]$	$T_s[2-2M_a \sin(\frac{\pi}{3}+\theta)]$

IV.SIMULATION RESULTS

To validate the effectiveness of the SVM based DTC methods, a two-level SVM based DTC motor drive was developed and simulation results are presented here. The space vector modulation based DTC drive is illustrated in Fig. 2. Space vector modulation technique is employed in closed loop torque and flux control to generate inverter switching states. A simulation work has been carried out on induction motor with the specifications given in appendix. The proposed scheme is simulated in MATLAB/SIMULINK which is shown in Fig 5.

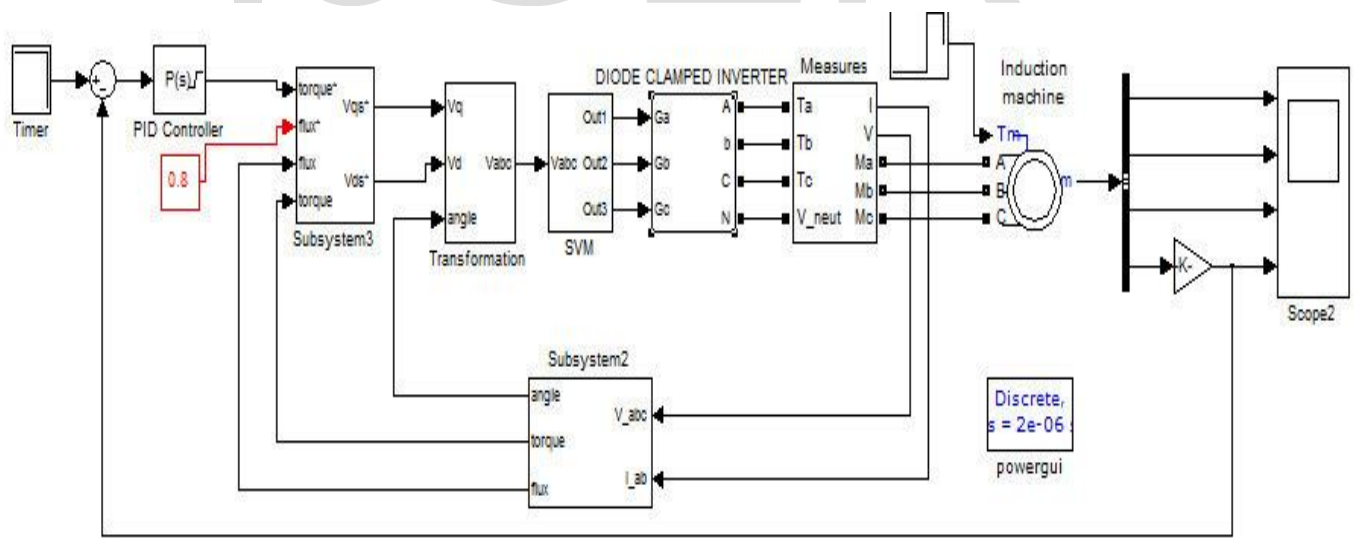

Fig.7 Modelling of Three level DTC-SVM Scheme of Induction Motor.

`

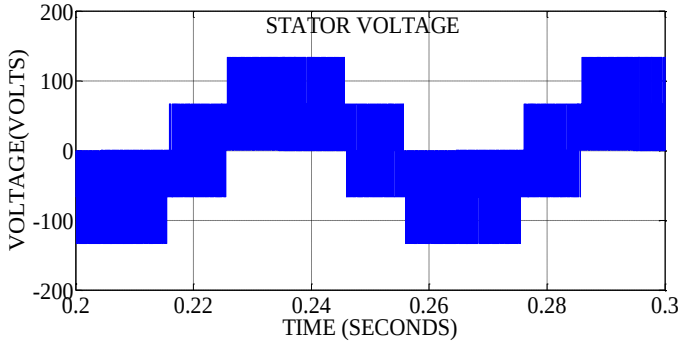

Fig.8 Stator Voltage in Two-Level DTC-SVM

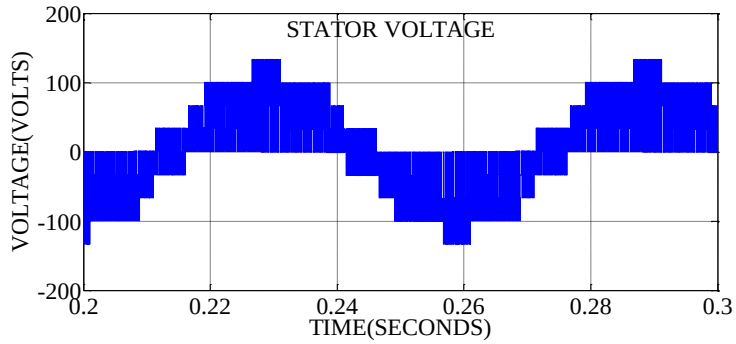

Fig.10 Stator Voltage in Three-Level DTC-SVM

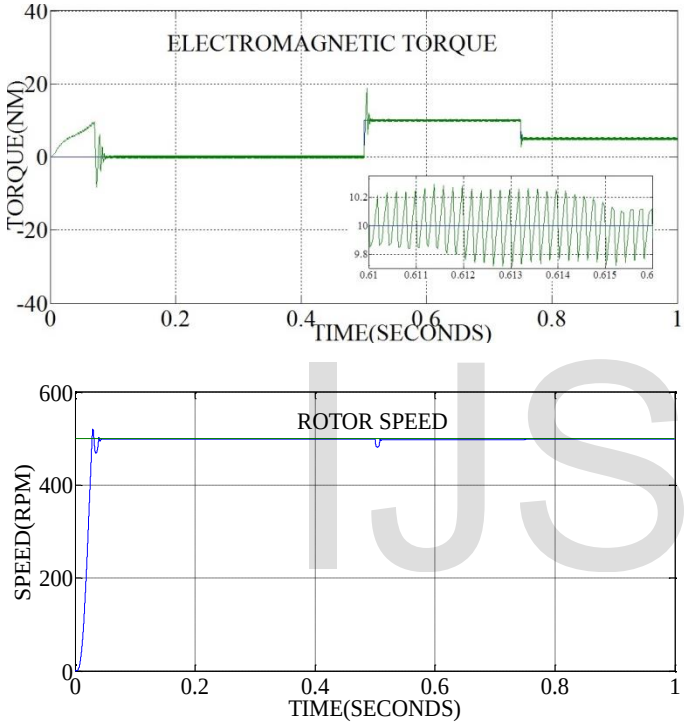

Fig.9 Torque and speed Response for three level DTC-SVM

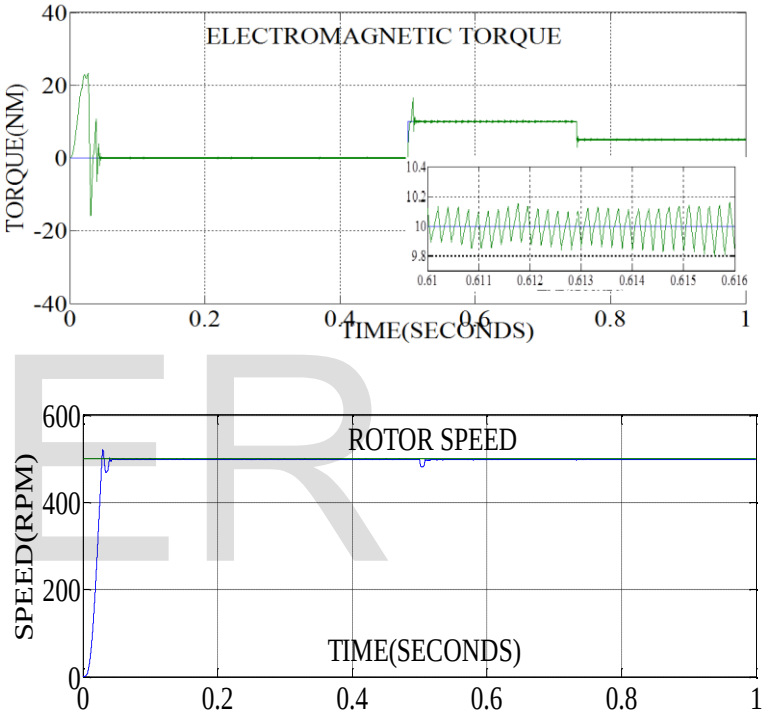

Fig.11 Torque and speed Response for three level DTC-SVM

Fig 9. shows torque and speed response for two level DTC-SVM based Induction machine. Intially motor starts with zero load torque, electromagnetic torque develops in the machine follows the load torque applied with few oscillation during startup. At the time t=0.5s, load torque of 10Nm is applied where electromagnetic torque oscillates to peak value and then settles at t=0.53s. At time t=0.75s, 5Nm load orque is removed. Steady state ripples appear in output torque with maximum and minimum value of 10.4 and 9.8Nms respectively.When half the load torque is applied, rotor speed decreases slightly below 500 RPM momentarily and remain constant for remaining periods in two-level DTC-SVM of induction motor. Two- level SVM based DTC stator voltage is shown in Fig.8

Fig 11. shows torque and speed response for three level DTC-SVM based Induction maachine. Intially motor starts with zero load torque, electromagnetic torque develops in the machine follows the load torque applied with few oscillation during startup. At the time t=0.5s, load torque of 10 Nm is applied where electromagnetic torque oscillates to peak value and then settles at 0.53s. Steady state ripples appear in output torque with maximum and minimum value of 10.15 and 9.85 Nm respectively.At time t=0.75s, 5Nm load torque is removed, torque developed in machine also reduced to the value around 5 Nm.When half the load torque is applied, rotor speed decreases slightly below 500 RPM momentarily and remain constant for remaining periods in three-level DTC-SVM of induction motor. Three- level SVM based DTC stator voltage is shown in Fig.10

It is inferred from the simulation results that increase in the number of levels in output voltage will drastically reduce the torque ripples in three-level SVM based Direct Torque Control.

V. CONCLUSION

In this paper, three Level diode clamped inverter fed direct torque control of Induction Motor has been proposed which is based on PI controllers and three-level space vector modulation. Three-Level DTC-SVM strategy realizes almost ripple free operation for entire speed range. Simulation results reveals that increased number of levels in output voltage would results in less torque ripple compared to two-level inverter fed DTC.

APPENDIX

Motor parameter used in the simulation:
Induction Motor Detail
380V, 3KW, 4 Poles, 1415 rpm

Stator resistance	1.85 ohm
Stator inductance	1.84 mH
Moment of inertia	0.007 kg.m2
Friction coefficient	0.000503 N.m.s/rad

REFERENCE

[1] Takahashi and T. Noguchi, "A newquick-response and high-efficiency control strategy of an induction motor," *IEEE Trans. Ind. Applicat.*, vol. IA-22, Sept./Oct. 1986.

[2] P. Tiitinen, "The next generation motor control method, DTC direct torque control," in *Proc. Int. Conf. Power Electronics, Drives and Energy System for Industrial Growth*, New Delhi, India, 1996, pp. 37–43.

[3] T. G. Habetler and D. M. Divan, "Control strategies for direct torque control using discrete pulse modulation," *IEEE Trans. Ind. Appl*, vol. 27, No. 5, pp.893-901,Sep./Oct. 1991.

[4] J.-W. Kang and S. K. Sul, "Analysis and prediction of inverter switching frequency in direct torque control of induction machine based on hysteresis bands and machine parameters," *IEEE Trans. Ind. Electron.*, vol. 48, pp. 545–553, June 2001.

[5] D. Casadei, G. Grandi, G. Serra, A. Tani, "Effects of flux and torque hysteresis band amplitude in direct torque control of induction machines," in *20th International Conference on Industrial Electronics Control and Instrumentation (IECON)*, Vol. 1, pp. 299-304, 1994

[6] J.-W. Kang, D.-W. Chung, and S. K. Sul, "Direct torque control of induction machine with variable amplitude control of flux and torque hysteresis bands," in *Proc. Int. Conf. Electric Machines and Drives (IEMD'99)*, 1999, pp. 640–642.

[7] T. G. Habetler, F. Profumo, M. Pastorelli, and L. M. Tolbert, "Direct torque control of induction machines using space vector modulation," *IEEE Trans. Ind. Applicat.*, vol. 28, pp. 1045–1053, Sept./Oct. 1992.

[8] J. K. Kang and S. K. Sul, "Torque ripple minimization strategy for direct torque control of induction motor," in *Conf. Rec. IEEE-IAS Annu. Meeting*, 1998, pp. 438–443.

[9] J. Kang, S. Sul "New direct torque control of induction motor for minimum torque ripple and constant switching frequency," IEEE Transaction on Industry Applications, Vol. 35, no. 5, pp. 1076-1082,sept/Oct 1999.

[10] J. Rodriguez, S. Bernet, B. Wu, J. O. Pontt, S. Kouro, "Multilevel voltage-source-converter topologies for industrial medium-voltage drives", IEEE Transactions on Industrial Electronics, Vol. 54, No. 6, pp.2930-2945, 2007.

[11] W. Yao, H. Hu, Z. Lu, "Comparisons of space vector modulation and carrier-based modulation of multilevel inverter", IEEE Transactions on Power Electronics, Vol. 23, No. 1, pp. 45-51, 2008.

[12] S. Busquets, S. Alepuz, J. Bordonau, J. Peracaula, "Voltage balancing control of diode-clamped multilevel converters with passive front-ends",IEEE Transactions on Power Electronics, Vol. 23, No. 4, pp. 1751–1758, 2008.

[13] Y. Zhang, Z. Zhao, "Study on capacitor voltage balance for multilevel inverter based on a fast SVM algorithm", Proceeding of the CSEE(in Chinese), Vol. 26, No. 18, pp. 71-76, 2006.

[14] S.K. Mondal, J.O.P Pinto, B.K. Bose, "A Neural-Network-Based Space Vector PWM Controller for a Three-Level Voltage-Fed Inverter Induction Motor Drive", IEEE Trans. on I.A., Vol. 38, no. 3, May/June 2002, pp.660-669.

[15] Yo-Han Lee, Burn-SeokSuh, Chang-Ho Choi, Dong-Seok Hyun, "A New Neutral Point Current Control for a 3-level Converter/Inverter Pair System", IEEE Trans on I.A., Vol. 3, 1999, pp. 1528-1534.

[16] A. Kocalmis, "Modelling and Simulation of A Multilevel Inverter Using SVPWM", MSc Thesis, Institute of Science, Firat University, 2005.

[17] StigMunk-Nielsen, Paul Bach Thøgersen, "Three Level Space Vector Modulation Strategy for Two Level Parallel Inverters",Thesis, Insitute of Energy Technology,2009

[18] Mr.Manoj Kumar Sahu, Dr.B.P.Panigrahi, Dr.A.K. Panda, "An Utility Friendly Direct Torque Control Technique Of Three Phase Induction Motor With Two Level Inverter Using 180 Degree Conduction Mode", IJEST, ISSN : 0975-5462 vol. 3 no. 5 May 2011.